Application Note: AN5
PM4-PH input connections via pH amplifier

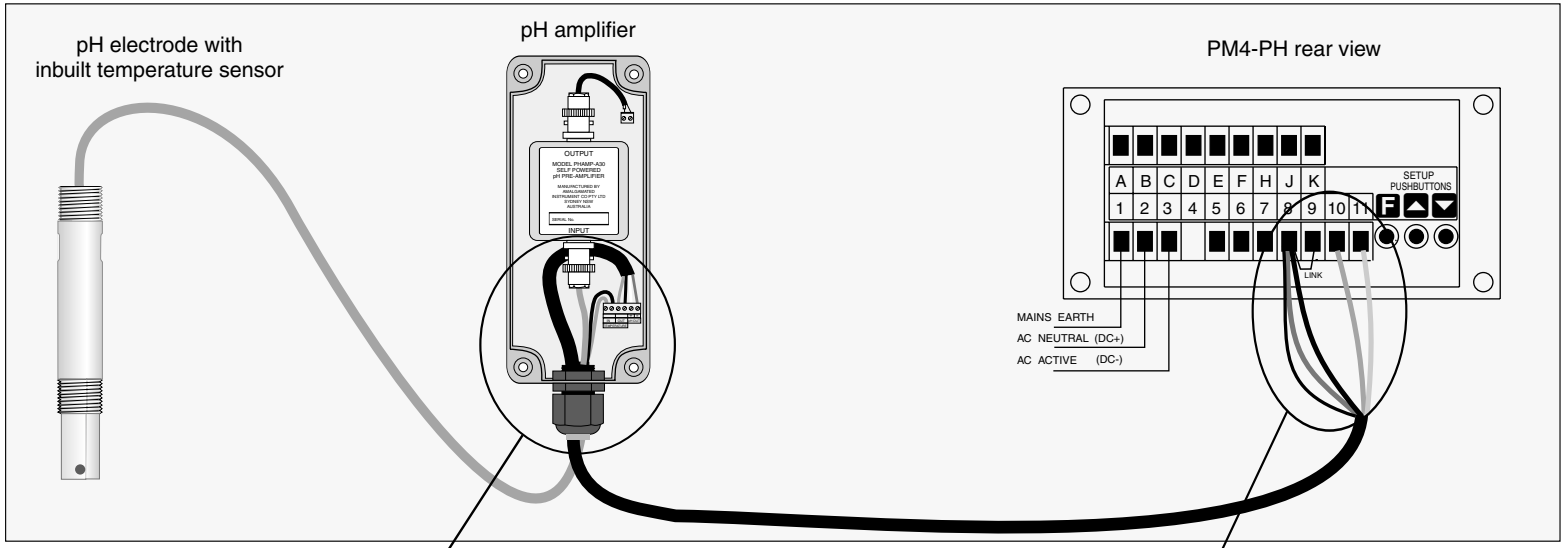

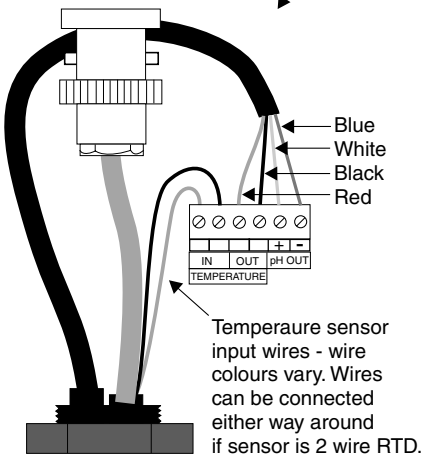

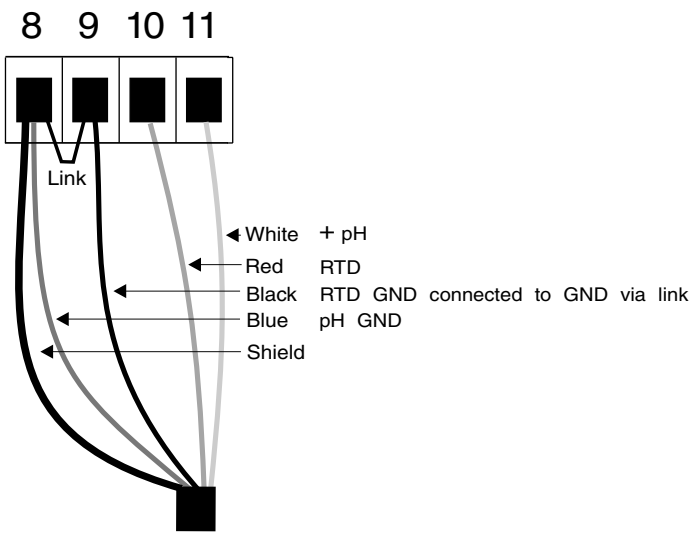

AMALGAMATED INSTRUMENT CO PTY LTD

ACN: 001 589 439

Unit 5, 28 Leighton Place Hornsby
NSW 2077 AUSTRALIA

Telephone: +61 2 9476 2244
Facsimile: +61 2 9476 2902

e-mail: sales@aicpl.com.au
Internet: www.aicpl.com.au

Quality Endorsed Company
Quality System
AS/NZS ISO 9001
Lic. No. QEC 6187
Standards Australia